V2-N TONSON VANE AIR MOTORS

NEMA 56C Mounting

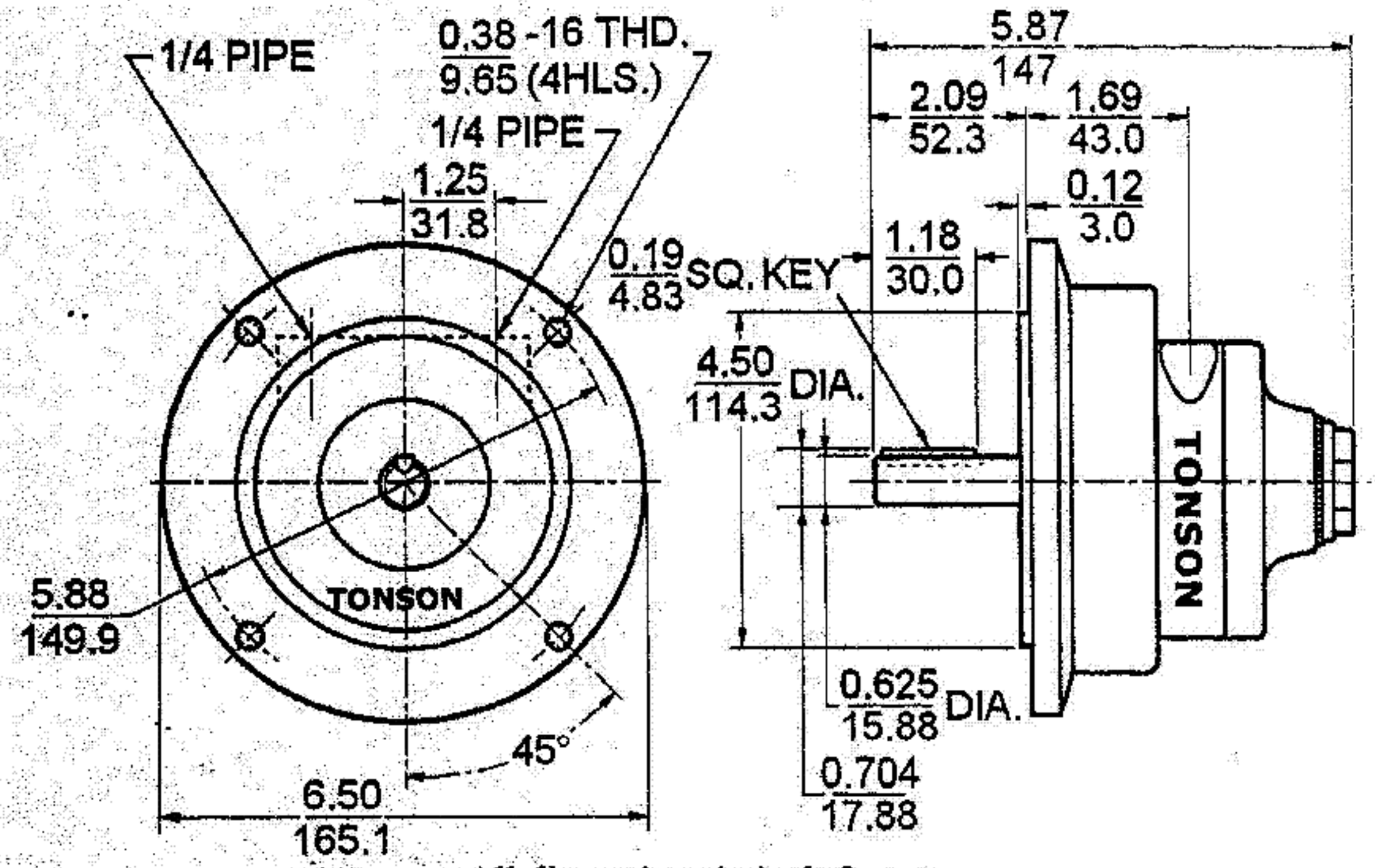

All dimensions in inch & mm

TONSON

Ph: 0411 729 849 Fax: (02) 9600 8882